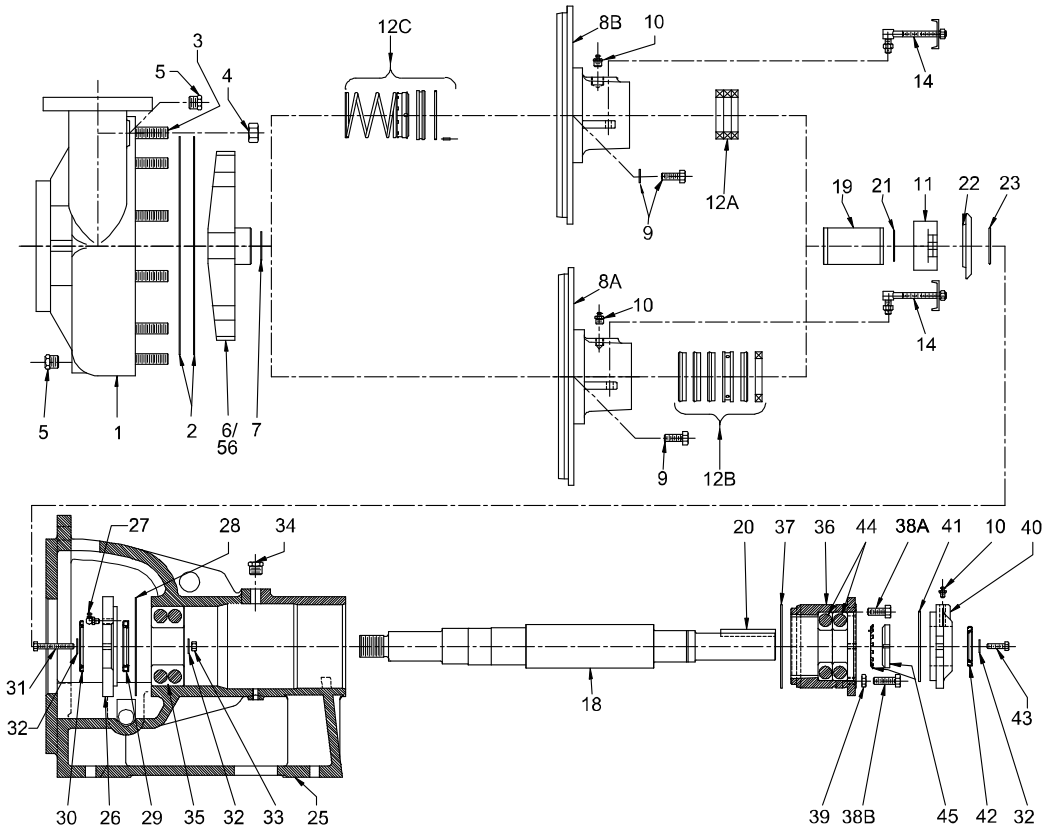

C250 Centrifugal Pump Parts				
Item	**Part Number**	**Description**	**QTY**	**Note**
1		C250 Housing Assembly SPECIFY SIZE	1	*
2	3000200	C250 Housing Gasket	1	
3	3000300	C250 Housing Stud w/nut	12	
4	3000400	C250 Housing Nut	12	
5	3000500	C250 Drain Plug	1	
6		C250 Impeller SPECIFY SIZE	1	*
7	3000700	C250 Impeller Seal O-Ring	1	
8A	3000800	C250 HI Seal Plate (Stuffing Box) for Packing	1	
8B	3000810	C250 HI Seal Plate (Stuffing Box) for Mechanical Seal	1	
9	3000900	C250 Stuffing Box Bolt & Washer	1	
10	3001000	C250 Straight Grease Nipple	2	
11	3001100	C250 Packing Gland	1	
12A	3001200	C250 Graphite (backup) Packing	1	**
12B	3001210	C250 King Packing	1	
12B	3001220	C250 Teflon Packing	1	
12C	3001230	C250 Mechanical Seal Assembly	1	**
14	3001400	C250 Gland Bolt Assembly (drw items 14/15/16/17) 2ea per pump	2	
18	3001800	C250 Shaft	1	
18	3001801	C250 Shaft for lock bolt type Impeller	1	
19	3001900	C250 Shaft Sleeve, Ceramic	1	
20	3002000	C250 Shaft Key Drive Side	1	
21	3002100	C250 Shaft Sleeve Seal O-ring	1	
22	3002200	C250 Water Slinger Ring	1	
23	3002300	C250 Deflector O-ring	1	
not shown	3002400	C250 Deflector Outboard	1	
25	3002500	C250 Pedestal	1	
26	3002600	C250 Inboard Bearing Cover	1	

Dupagro B.V.
Ooststeeg 102
6708 AX Wageningen
The Netherlands

Phone +31 (0) 317 840 197
info@dupagro.nl
www.dupagro.nl

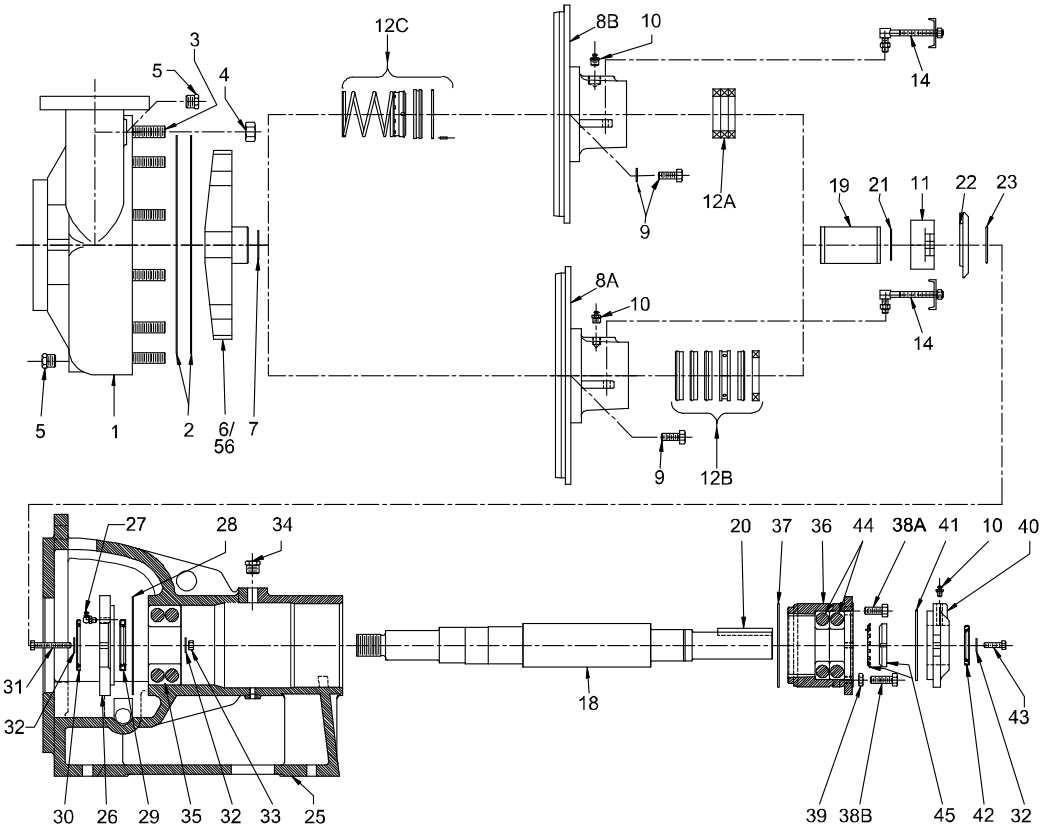

C250 Centrifugal Pump Parts				
Item	**Part Number**	**Description**	**QTY**	**Note**
27	3002700	C250 Grease Nipple 90deg.	1	
28	3002800	C250 Inboard Bearing Cover Gasket	1	
29	3002900	C250 Inboard Bearing Oil Seal	1	
30	3003000	C250 Inboard Exclusion Oil Seal	1	
31	3003100	C250 Inboard Bearing Cover Bolt	2	
32	3003200	C250 Inboard Bearing Cover Washer	6	
33	3003300	C250 Inboard Bearing Cover Nut	2	
34	3003400	C250 Pedestal Plug	1	
35	3003500	C250 Inboard Bearing	1	
36	3003600	C250 Outboard Bearing Housing	1	
37	3003700	C250 Outboard Bearing Housing O-ring	1	
38A	3003800	C250 Outboard Bearing Housing Bolt (short)	2	
38B	3003801	C250 Outboard Bearing Housing Bolt (long /f Jam nut)	2	
39	3003900	C250 Outboard Bearing Housing Jam Nut	2	
40	3004000	C250 Outboard Bearing Cover	1	
41	3004100	C250 Outboard Bearing Cover O-Ring	1	
42	3004200	C250 Outboard Bearing Cover Oil Seal	1	
43	3004300	C250 Outboard Bearing Cover Bolt	2	
44	3004400	C250 Outboard Bearing	2	
45	3004500	C250 Bearing Lock Nut Kit (items 45&46)	1	
56		C250 Impeller for lock bolt shaft type, SPECIFY SIZE	1	*
		REPAIR KITS		
57	3005777	C250 Fluid End Gasket Kit (items 3000200/ 3000700/ 3002100)		
58	3005888	C250 Oil Seal Kit (items 3002900/ 3003000/ 3004200)		
59	3005999	C250 Power End Gasket Kit (items 3002800/ 3003700/ 3004100)		
	* **	Specify size, right hand or left hand and material Mechanical seal and graphite backup packing are sold separately		

Dupagro B.V.
Ooststeeg 102
6708 AX Wageningen
The Netherlands

Phone +31 (0) 317 840 197
info@dupagro.nl
www.dupagro.nl